metabo®

KGS 303 PLUS

0103030000 10

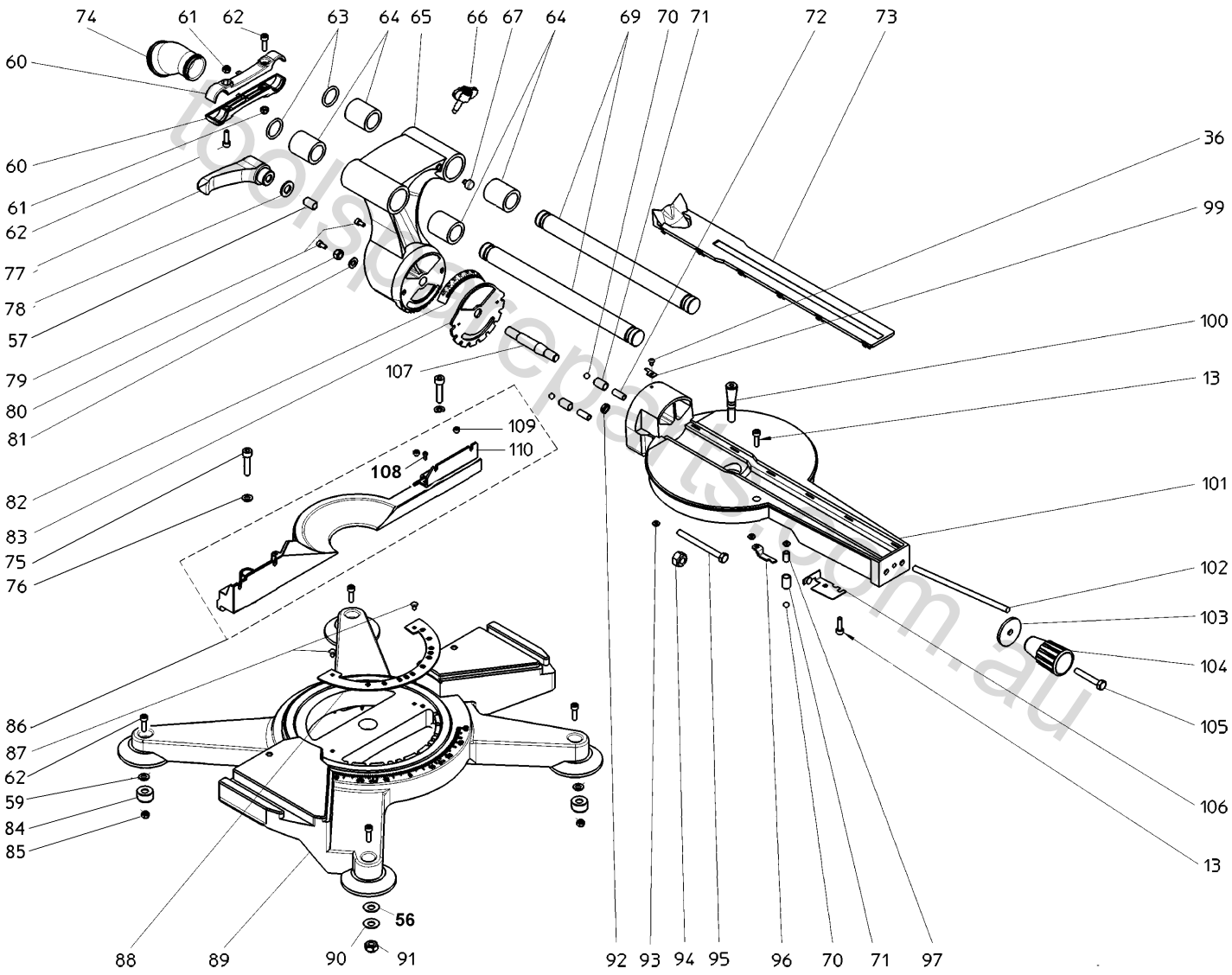

toolspareparts.com.au

metabo®

KGS 303 PLUS

0103030000 10

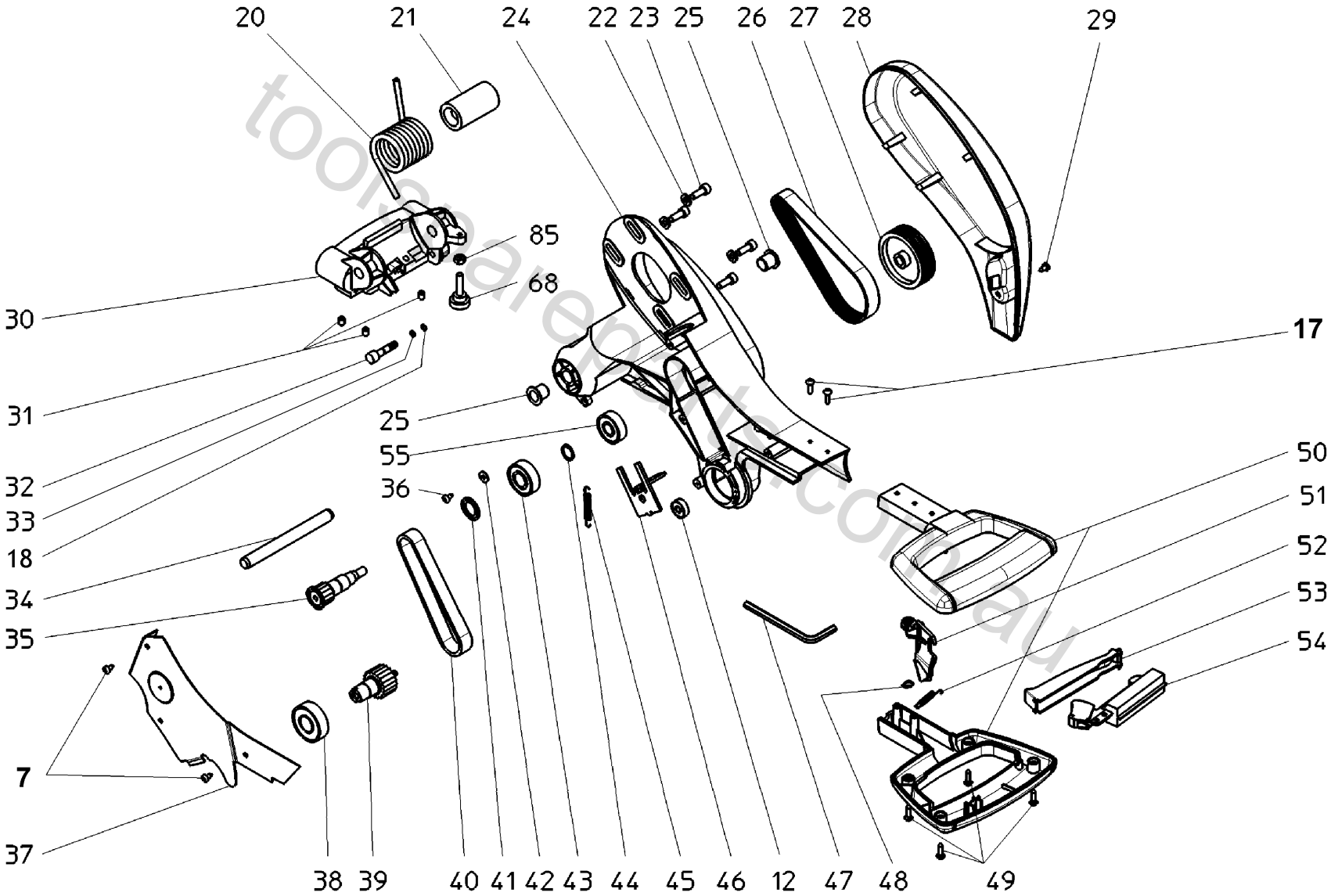

toolspareparts.com.au

KGS 303 PLUS

0103030000 10

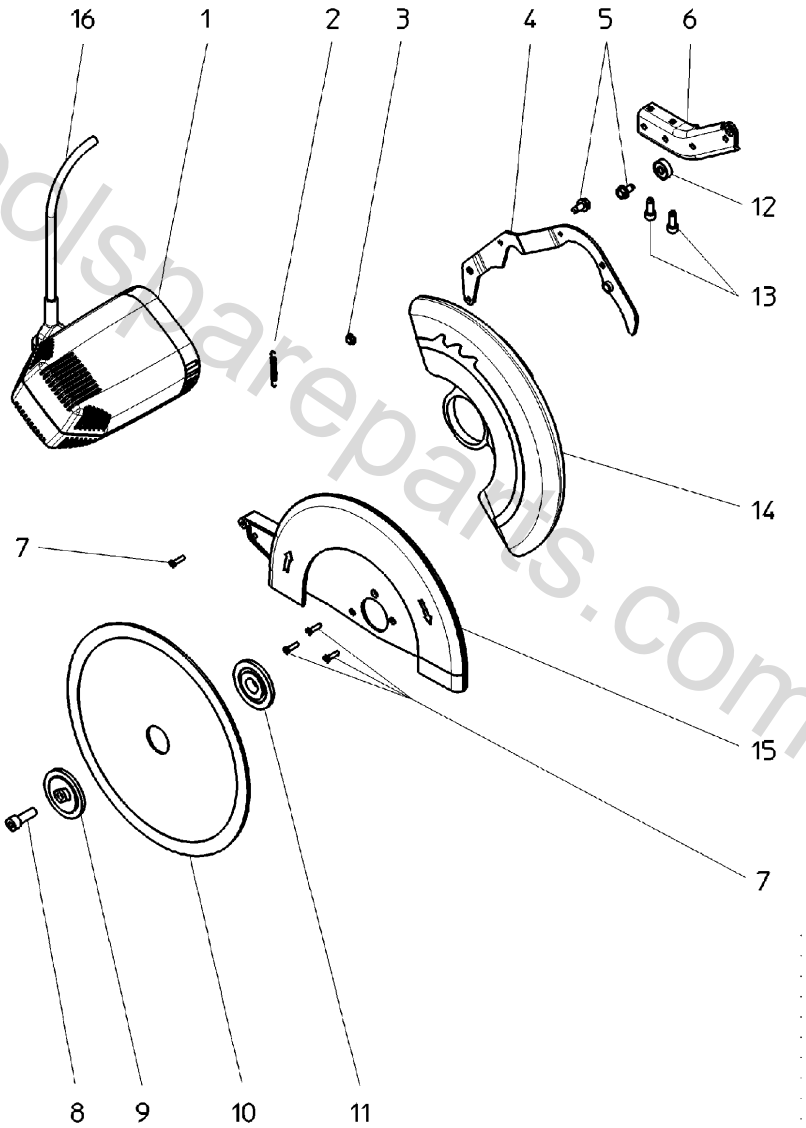

toolsspareparts.com.au

metabo®

KGS 303 PLUS

0103030000 10

Position	Amount	Type number	Description	PG
1	1	1010680618	ELECTRIC MOTOR 1,8KW 230/1/50	56
2	1	7051681937	PRESSURE SPRING RD 1,5X12X63,1 KGS303	14
3	1	7637651433	SLIDE BUSHING RDI 06 (F.3MM BLECH)	12
4	1	1482682118	Drehblech KGS303 BL 2,50x82x220	26
5	2	6143124744	HEX. HEAD THREAD ROLLING SCREW	10
6	1	1482682142	Sperrblech KGS303 BL 2,00x49,5x145	27
7	6	6174001900	COUNTERSUNK HEAD TAPPING SCREW	10
8	1	6121000839	Cap screw	10
9	1	1482221900	BLADE COLLAR, OUTER	17
10	1	0910030973	SAW BLADE TCT 250X2,8/2,0X30 Z=24 WZ 3 G	
11	1	1485221618	Blade collar, inner	23
12	3	7100047262	DEEP GROOVE BALL BEARING 6X19X6 626 -2Z	15
13	3	6143075247	Cap screw w.internal hexagon	12
14	1	1381679914	RETRACTABLE BLADE GUARD KGS303	26
15	1	1380679821	DISC GUARD KGS303	33
16	1	8402680661	CABLE WITH PLUG 2X1,0X2336/2XKS KGS303	26
17	2	6172001830	Fillister head screw	10
18	1	7632609080	O-RING 4X2,5 80 SHORE A	10
20	1	7051680647	TORSION SPRING RDI 33 KGS303	18
21	1	1381685795	BUSHING 30/12,3X54 KGS 303	20
22	3	141151940	Washer	10
23	4	6122151520	HEXAGON SOCKET HEAD CAP SCREW M 6X16 VER	12
24	1	1380679805	Kapparm KGS303	43
25	2	7637685800	SLIDE BUSHING 12X14X15 MIT BUND	13
26	1	7233680626	POLY-RIB BELT	22
27	1	1380679902	POLY-RIB PULLEY 7J / RDA 62,5X19,3 KGS30	29
28	1	1381679922	BELT GUARD KGS303	25
29	1	6172028215	Fillister head screw	10
30	1	1380679783	SWIVEL CASTING KGS303	38
31	3	6164029245	Grub screw w.internal hexagon	10
32	1	1485681953	LOCKING PIN RD 10/6,4X40 KGS303	15
33	1	1327064092	O-RING 4,0X1,0	13
34	1	1485681945	SHAFT RD 12X124 KGS303	16
35	1	1385680577	SHAFT 14HTD5M15 RD25X70,5 KGS303	29
36	1	6172001791	Fillister head screw w. cross head	10
37	1	1482682088	GUARD PLATE BL 1,00X141X262,5 KGS303	16
38	1	7100017703	DEEP GROOVE BALL BEARING 17X40X12 6203-2	20
39	1	1385680593	SAW BLADE SPINDLE 20HTD5M15 RD31X57,5 KG	33
40	1	7231680580	COGGED BELT	26
41	1	1482680670	WASHER	10
42	1	141150110	Washer	10

toolspareparts.com.au

43	1	7100136915	DEEP GROOVE BALL BEARING	19
44	1	141180090	Retaining ring	12
45	1	7051074232	TENSION SPRING	12
46	1	1482681839	Spindle lock	14
47	1	9102016766	ALLEN HEXAGON KEY	12
48	1	141180020	Retaining ring	10
49	4	6186602763	Fillister head screw w.fill. head screw	10
50	1	1381679680	HANDLE KGS303	24
51	1	1381679930	HAUBENARRETIERUNG KGS303	13
52	1	7051074232	TENSION SPRING	12
53	1	1381679698	CAP KGS303	13
54	1	8111680605	Switch On/Of 2-Polig UM 230V 10A KGS303	35
55	1	7100083463	DEEP GROOVE BALL BEARING	18
56	1	141150050	Washer	10
57	1	1485212970	Spacer sleeve	14
59	4	6305002486	Washer	10
60	2	1380679880	STABILISATOR KGS303	20
61	2	6202002291	HEXAGON NUT, PREV. TORQUE TYPE	10
62	6	141113870	Cap screw	12
63	2	7632170119	O-RING 22X2	10
64	4	7121680658	LINEAR BALL BEARING RD 25/35X40 TYP KH 2	27
65	1	1380679767	Pivot,KGS303	40
66	1	6150657243	THUMB SCREW M 6X16	12
67	1	2391203906	PLUG-IN BUFFER	10
68	1	6143071144	KNURLED THUMB SCREW M 6X25 VERZ.	12
69	2	1385680631	PISTON ROD RD 25X325 RANDSCHICHTGEHÄRTET	36
70	3	7123148635	STEEL BALL RD 7,938	10
71	3	1485215979	LOCK BOLT	15
72	2	7051683751	PRESSURE SPRING RDA=8,5 LO=25,6 8,5 WIND	10
73	1	1381679949	TABLE INSERT KGS303	19
74	1	1381684080	DUST EXTRACTION PORT RD 40/52 KGS303	14
75	2	6143076260	THREAD ROLLING SCREW M 8X35 - ST VERZ./G	13
76	2	6306017266	SHIM RING 8X14X1 VERZ.	10
77	1	7006028220	Clamping lever	24
78	1	6305002508	WASHER B 13 VERZ.	10
79	2	6121121296	HEXAGON SOCKET HEAD CAP SCREW	10
80	1	6208073395	CAP NUT, SELF-LOCKING	10
81	1	6300686603	WASHER	10
82	1	1142683519	ANGLE SCALE 0,08X14X96 48-0 0-48 GRAD	13
83	1	1482683769	SHIM PLATE BL3,00 KGS303	30
84	4	7057208753	RUBBER FOOT RD 30X17,5 80 SHORE	12
85	4	141130100	Hexagonal nut	10

toolspareparts.com.au

86	1	1010690141	FENCE, ASSEMBLY ET	39
87	2	6621075371	BLIND RIVET, MUSHROOM HEAD 5X8 F FLACHRU	10
88	1	1482683505	SHIM PLATE BL2,00 KGS303	20
89	1	1380703986	TABLE KGS303	51
90	1	141150540	Saucer spring	10
91	1	6202002313	HEXAGON NUT, PREV. TORQUE TYPE	10
92	1	6205029131	HEXAGON THIN NUT	10
93	3	2391202772	GLIDE PIECE	10
94	1	6202024139	HEXAGON NUT, PREV. TORQUE TYPE	10
95	1	6103122986	HEXAGON HEAD SCREW M 8X85 VERZ.	12
96	1	1482681979	POINTER BL 2,00X12X46 KGS303	13
97	1	7051683611	PRESSURE SPRING RDA=8,5 LO=17,7 5,5 WIND	10
99	1	1482681987	ANGLE POINTER BL 1,50X10X21,5 KGS303	12
100	1	1385682006	DREHTELLERBOLZEN KGS303 RD 16/M10X63	20
101	1	1380679848	TURNTABLE KGS303	45
102	1	1385682014	CLAMPING ROD RD 8X185,5 KGS303	14
103	1	1485683840	WASHER RDA44XRDI9X4 KGS 303	13
104	1	7006018305	KNOB, RED M8 EINSPRITZBUCHSE SCHWARZ	19
105	1	6103001216	HEXAGON HEAD SCREW M 8X50 VERZ.	10
106	1	1482682029	CLAMPING PLATE BL 2,00X35X68,5 KGS303	13
107	1	1385681999	Swivel arm bold RD 16,3/M12X122 KGS303	23
108	2	6164686599	HEX. SOCKET SET SCREW, DOG PT. M 8X6 VER	10
109	1	6143142823	THREAD ROLLING SCREW A M 5X12 - ST-Z VER	10
110	1	1482684412	TUBBING PLATE BL 2,99X59,4X107 KGS303	24

toolspareparts.com.au

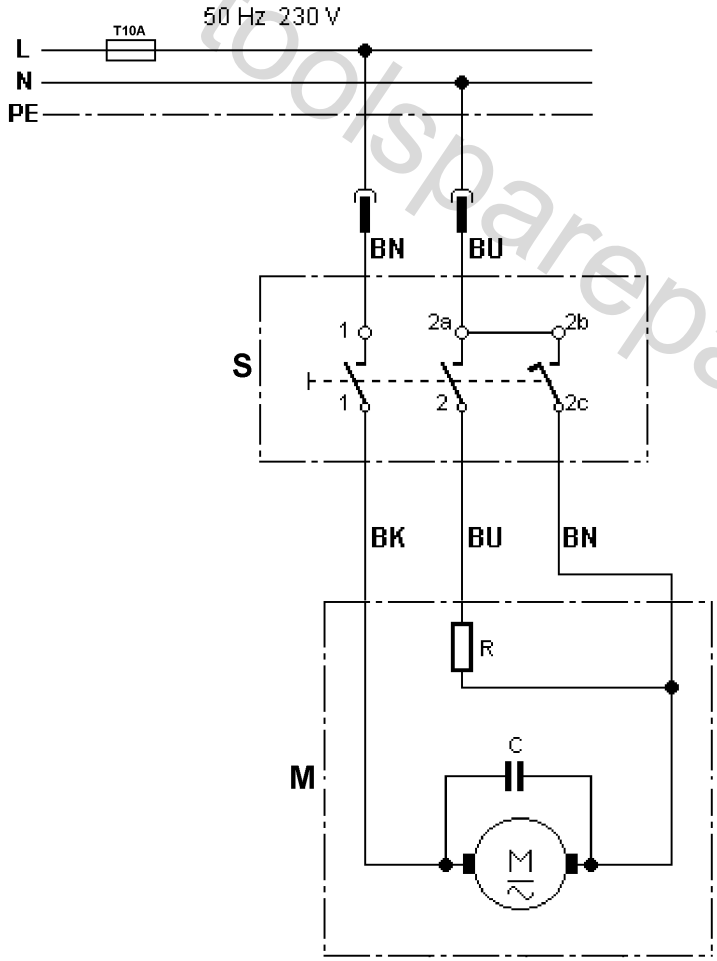

	Litzenfarben	Colour of strands	Couleur des cordons
BK	schwarz	black	noir
WH	weiß	white	blanc
BU	blau	blue	bleu
YE	gelb	yellow	jaune
RD	rot	red	rouge
TR	transparent	transparent	transparent
BN	braun	brown	brun
GY	grau	grey	gris
GNYE	grün-gelb	green-yellow	vert-jaune
BKWH	schwarz-weiß	black-white	noir-blanc
GN	grün	green	vert
OG	orange	orange	orange
VT	violett	violet	violet
TQ	türkis	turquoise	turquoise

	Bedeutung der Kurzzeichen	Meaning of the symbols	Interprétation des symboles
C	Kondensator	condenser	condensateur
D	Funkentstördrossel	interference suppression inductance	inductance d'antiparasitage
E	Elektronik-Baustein	electronic unit	unité électronique
I	Induktionsspule	induction coil	bobine d'inductance
K	Klemme	terminal	borne
L	Licht	light	lumière
M	Motor	motor	moteur
O	Überlastschutz	overload cut-out	déclencheur de surintensité
R	Widerstand	resistor	résistance
S	Schalter	switch	interrupteur
U	Umschalter	change-over switch	commutateur
X	Elektronik-Element	electronic element	élément électronique

toolspareparts.com.au